P 252



TECHNICAL DATA

Fluid connections	**1" 1/4 BSPP**
Air connection	**1/2" BSPP**
Max. flow rate	**250 lt/min**
Max air pressure	**8 bar**
Max delivery head	**80 m**
Max suction lift dry	**5 m**
Max suction lift wet	**9,8 m**
Max solid passing	**7,5 mm**
Noise level	**75 dB**
Max viscosity	**35.000 cps**
Displacement per stroke	**700 CC ~**

Displacement per stroke may vary based on suction condition, discharge head, air pressure and fluid type.

II 2/2 G Ex h IIB T4 Gb

II 2D Ex h IIIB T135°C Db X

POLYPROPYLENE+CF

WEIGHT 11,2 kg

TEMPERATURE -4°C +65°C

PERFORMANCE

The curves and performance values refer to pumps with submerged suction and free delivery outlet, with water at 20 °C. These data may vary according to the construction materials and hydraulic conditions.

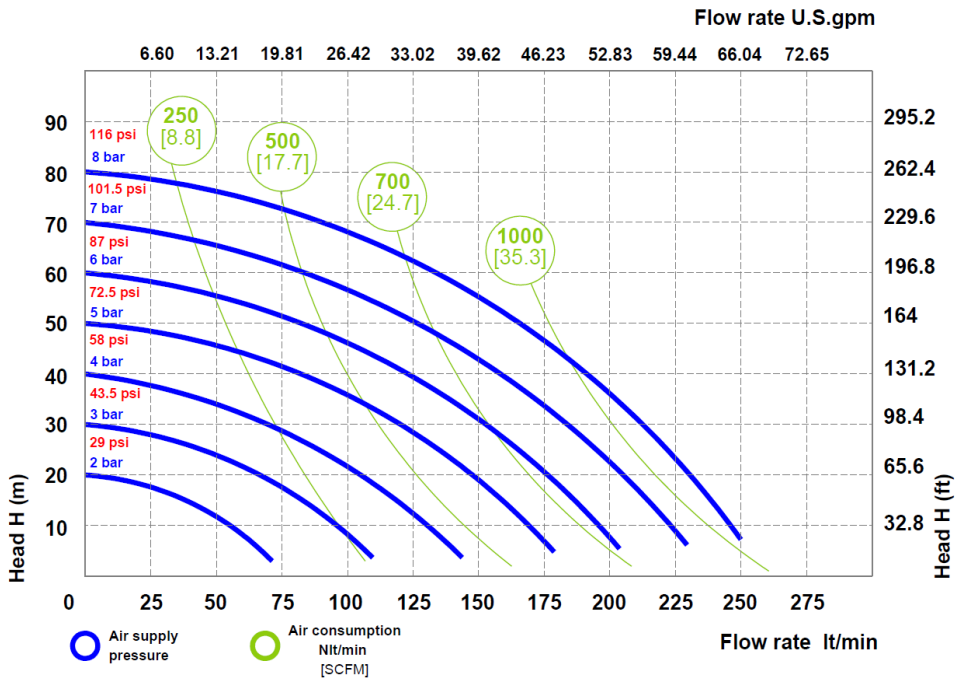

FLUIMAC S.r.l. - Via Breascia ,1 - 21049 - Tradate - VA - ITALY
info@fluimac.com - www.fluimac.com
tel. +39 0331 866688 - Fax +39 0331 864870
P.I./VAT 03259160129

ISO 9001:2008

P 252

COMPOSITION

MODEL	CASING	DIAPHRAGM	BALLS	SEATS	GASKET	CONNECTIONS	ATEX	PORTS
P0252	PC = PP + CF	HT = HYTREL+PTFE MT = SANTOPRENE+PTFE H = HYTREL W = SANTOPRENE H.R. D = EPDM N = NBR	T=PTFE S=SS D = EPDM N = NBR	P = PP S = SS Z = PE-UHMWE	D = EPDM V = VITON N = NBR T = PTFE	1 = BSPP 2 = FLANGED 5 = NPT A = BSPP with reinforce ring E = NPT with reinforce ring	X = ZONE 1	AB = STANDARD

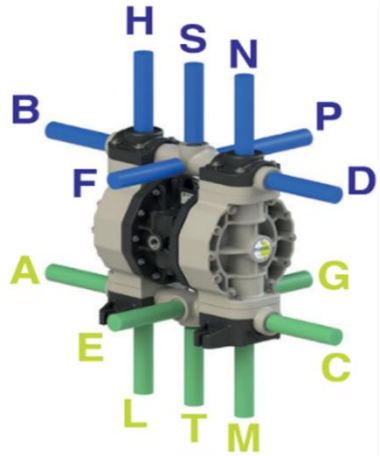

AVAILABLE CONNECTIONS

DELIVERY: B-D-S-F-P-H-N

SUCTION: A-C-T-E-G-L-M

PACKING DIMENSION

CARTON BOX: 43 x 27 x 45 cm

DIMENSIONS

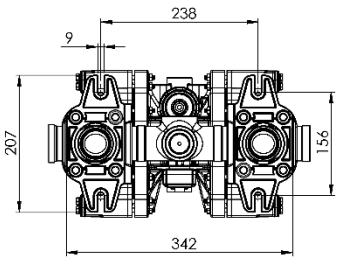

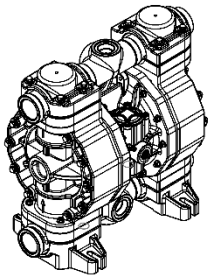

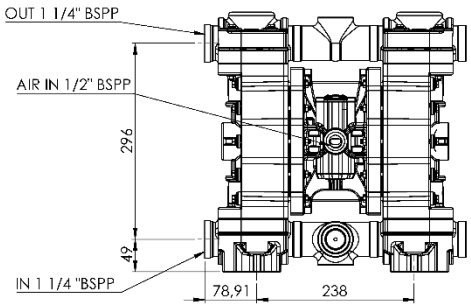

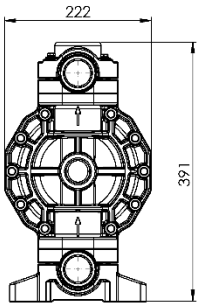

Technical data are approximate and not binding for the manufacturer who reserves the right to change them without notice at any time.

Made in Italy

fluimac pump solution

FLUIMAC S.r.l. - Via Breascia ,1 - 21049 - Tradate - VA - ITALY
info@fluimac.com - www.fluimac.com
tel. +39 0331 866688 - Fax +39 0331 864870
P.I./VAT 03259160129

ISO 9001:2008

P 252



TECHNICAL DATA

Fluid connections	**1" 1/4 BSPP**
Air connection	**1/2" BSPP**
Max. flow rate	**250 lt/min**
Max air pressure	**8 bar**
Max delivery head	**80 m**
Max suction lift dry	**5 m**
Max suction lift wet	**9,8 m**
Max solid passing	**7,5 mm**
Noise level	**75 dB**
Max viscosity	**35.000 cps**
Displacement per stroke	**700 CC ~**

Displacement per stroke may vary based on suction condition, discharge head, air pressure and fluid type.

II 2/2 G Ex h IIB T4 Gb

II 2D Ex h IIIB T135°C Db X

PVDF+CF

WEIGHT 13,2 kg

TEMPERATURE -20°C +90°C

PERFORMANCE

The curves and performance values refer to pumps with submerged suction and free delivery outlet, with water at 20 °C. These data may vary according to the construction materials and hydraulic conditions.

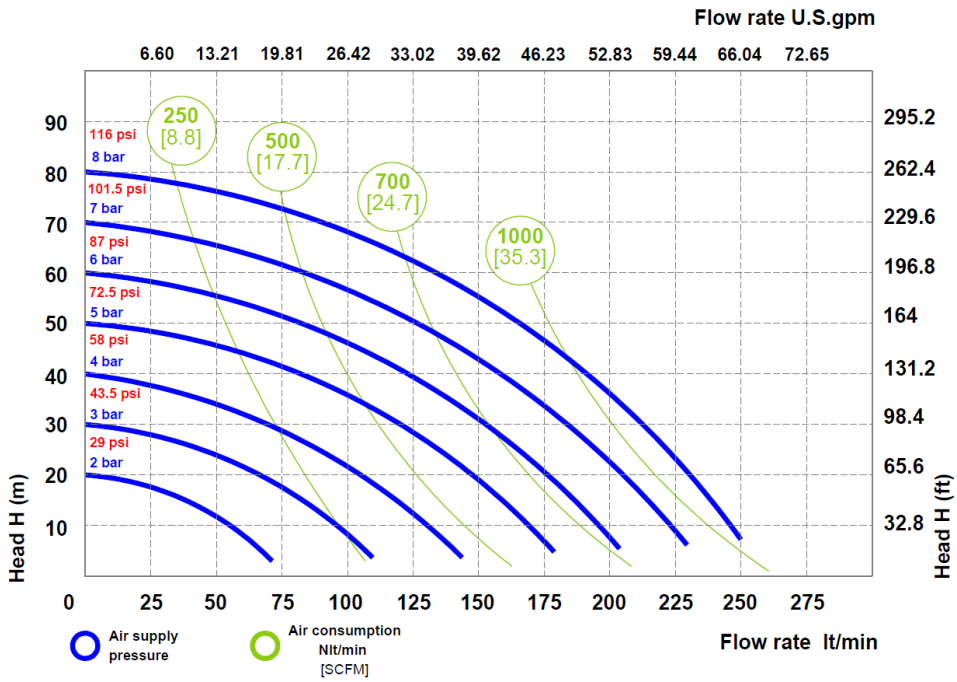

FLUIMAC S.r.l. - Via Breascia ,1 - 21049 - Tradate - VA - ITALY
info@fluimac.com - www.fluimac.com
tel. +39 0331 866688 - Fax +39 0331 864870
P.I./VAT 03259160129

ISO 9001:2008

P 252

COMPOSITION

MODEL	CASING	DIAPHRAGM	BALLS	SEATS	GASKET	CONNECTIONS	ATEX	PORTS
P0252	KC = PVDF+CF	HT = HYTREL+PTFE MT = SANTOPRENE+PTFE H = HYTREL W = SANTOPRENE H.R. D = EPDM N = NBR	T=PTFE S=SS D = EPDM N = NBR	K=PVDF S=SS	D = EPDM V = VITON N = NBR T = PTFE	1 = BSPP 2 = FLANGED 5 = NPT A = BSPP with reinforce ring E = NPT with reinforce ring	X = ZONE 1	AB = STANDARD

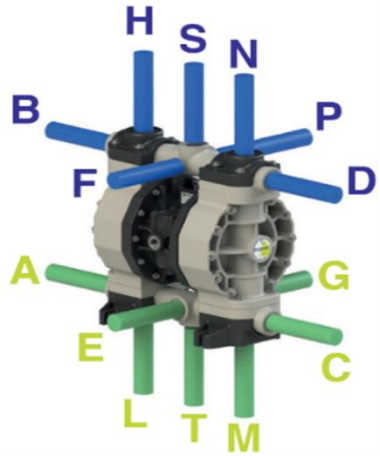

AVAILABLE CONNECTIONS

DELIVERY: B-D-S-F-P-H-N

SUCTION: A-C-T-E-G-L-M

PACKING DIMENSION

CARTON BOX: 43 x 27 x 45 cm

DIMENSIONS

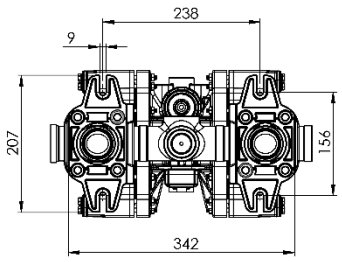

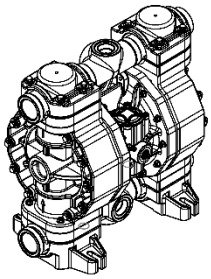

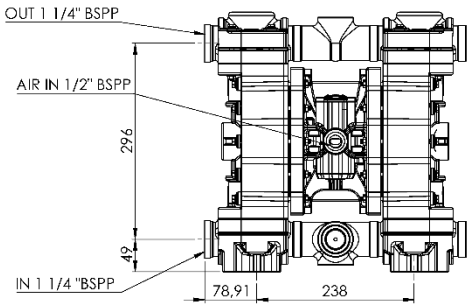

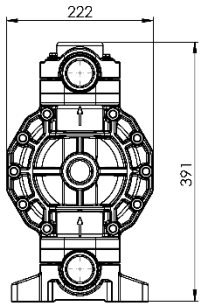

Technical data are approximate and not binding for the manufacturer who reserves the right to change them without notice at any time.

Made in Italy

fluimac pump solution
FLUIMAC S.r.l. - Via Breascia ,1 - 21049 - Tradate - VA - ITALY
info@fluimac.com - www.fluimac.com
tel. +39 0331 866688 - Fax +39 0331 864870
P.I./VAT 03259160129

ISO 9001:2008

P 250



ALUMINUM

WEIGHT
13,2 kg

TEMPERATURE
-20°C +95°C

TECHNICAL DATA

Fluid connections	**1" 1/4 BSPP**
Air connection	**1/2" BSPP**
Max. flow rate	**250 lt/min**
Max air pressure	**8 bar**
Max delivery head	**80 m**
Max suction lift dry	**5 m**
Max suction lift wet	**9,8 m**
Max solid passing	**7,5 mm**
Noise level	**75 dB**
Max viscosity	**35.000 cps**
Displacement per stroke	**700 CC ~**

Displacement per stroke may vary based on suction condition, discharge head, air pressure and fluid type.

- II 2/2 G Ex h IIB T4 Gb
- II 2D Ex h IIIB T135°C Db X

PERFORMANCE

The curves and performance values refer to pumps with submerged suction and free delivery outlet, with water at 20 °C. These data may vary according to the construction materials and hydraulic conditions.

file non trovato

fluimac pump solution
FLUIMAC S.r.l. - Via Breascia ,I - 21049 - Tradate - VA - ITALY
info@fluimac.com - www.fluimac.com
tel. +39 0331 866688 - Fax +39 0331 864870
P.I./VAT 03259160129

Made in Italy

ISO 9001:2008

P 250

COMPOSITION

MODEL	CASING	DIAPHRAGM	BALLS	SEATS	GASKET	CONNECTIONS	ATEX	PORTS
P0250	A = ALU	HT = HYTREL+PTFE MT = SANTOPRENE+PTFE H = HYTREL W = SANTOPRENE H.R. D = EPDM N = NBR	T=PTFE S=SS D = EPDM N = NBR	S=SS	D = EPDM V = VITON N = NBR T = PTFE	1 = BSPP 2 = FLANGED 5 = NPT	X = ZONE 1	AB = STANDARD

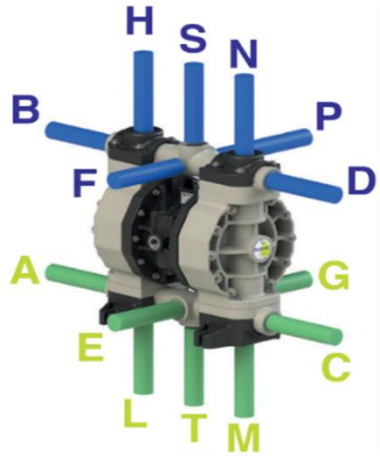

AVAILABLE CONNECTIONS

DELIVERY: B-D-S-F-P-H-N

SUCTION: A-C-T-E-G-L-M

PACKING DIMENSION

CARTON BOX: 43 x 27 x 45 cm

DIMENSIONS

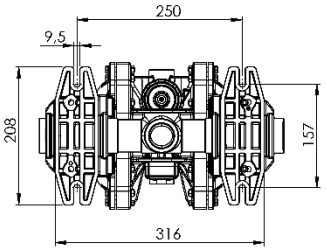

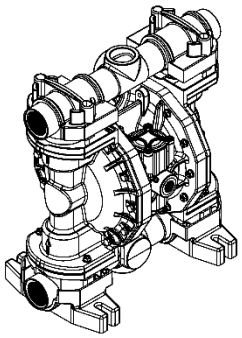

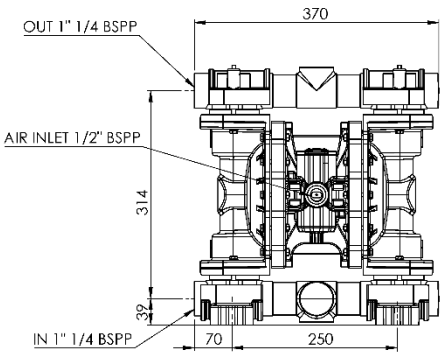

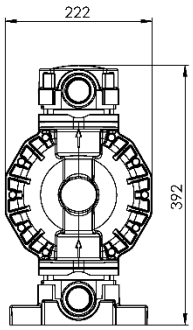

Technical data are approximate and not binding for the manufacturer who reserves the right to change them without notice at any time.

FLUIMAC S.r.l. - Via Breascia ,1 - 21049 - Tradate - VA - ITALY
info@fluimac.com - www.fluimac.com
tel. +39 0331 866688 - Fax +39 0331 864870
P.I./VAT 03259160129

ISO 9001:2008

P 252

file non trovato

TECHNICAL DATA

Fluid connections	**1" 1/4 BSPP**
Air connection	**1/2" BSPP**
Max. flow rate	**250 lt/min**
Max air pressure	**8 bar**
Max delivery head	**80 m**
Max suction lift dry	**5 m**
Max suction lift wet	**9,8 m**
Max solid passing	**7,5 mm**
Noise level	**75 dB**
Max viscosity	**35.000 cps**
Displacement per stroke	**700 CC ~**

Displacement per stroke may vary based on suction condition, discharge head, air pressure and fluid type.

II 2/2 G Ex h IIB T4 Gb

II 2D Ex h IIIB T135°C Db X

SS AISI 316

WEIGHT 17,2 kg

TEMPERATURE -20°C +95°C

PERFORMANCE

The curves and performance values refer to pumps with submerged suction and free delivery outlet, with water at 20 °C. These data may vary according to the construction materials and hydraulic conditions.

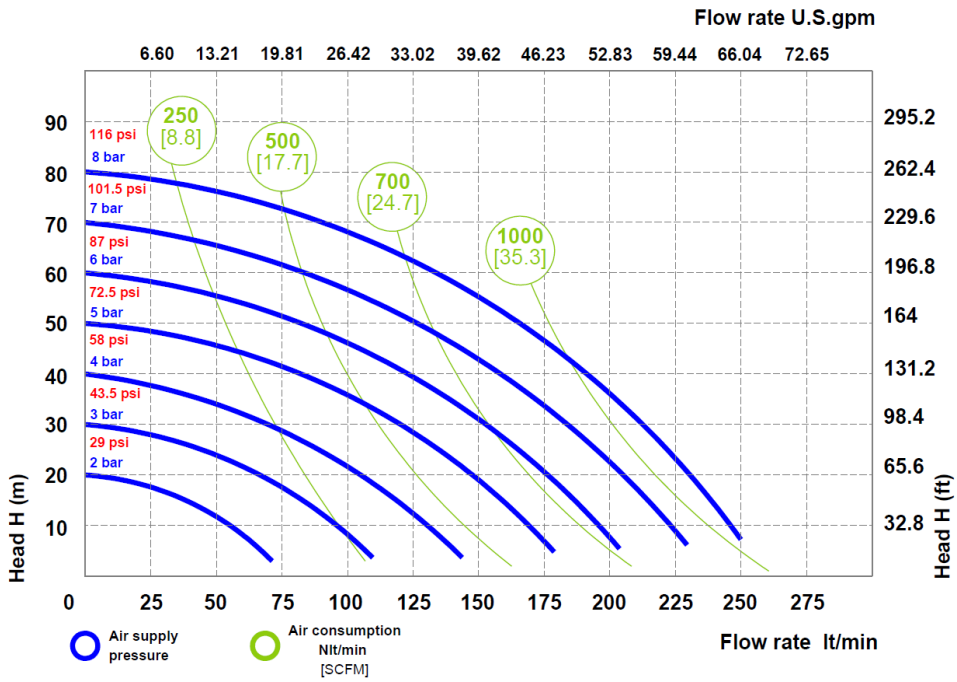

FLUIMAC S.r.l. - Via Breascia ,1 - 21049 - Tradate - VA - ITALY
info@fluimac.com - www.fluimac.com
tel. +39 0331 866688 - Fax +39 0331 864870
P.I./VAT 03259160129

ISO 9001:2008

P 252

COMPOSITION

MODEL	CASING	DIAPHRAGM	BALLS	SEATS	GASKET	CONNECTIONS	ATEX	PORTS
P0252	S = SS	HT = HYTREL+PTFE MT = SANTOPRENE+PTFE H = HYTREL W = SANTOPRENE H.R. D = EPDM N = NBR	T=PTFE S=SS D = EPDM N = NBR	S=SS	T = PTFE	1 = BSPP 2 = FLANGED 5 = NPT	X = ZONE 1	AB = STANDARD

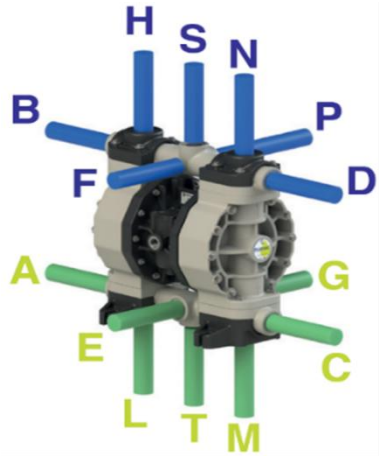

AVAILABLE CONNECTIONS

DELIVERY: B-D-S-F-P

SUCTION: A-C-T-E-G

PACKING DIMENSION

CARTON BOX: 43 x 27 x 45 cm

DIMENSIONS

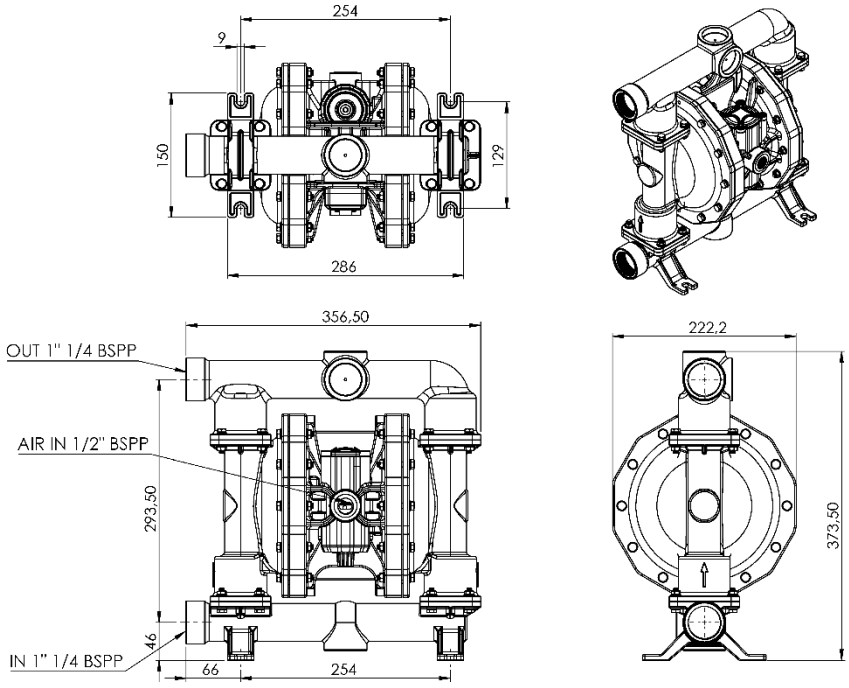

Technical data are approximate and not binding for the manufacturer who reserves the right to change them without notice at any time.

Made in Italy

fluimac pump solution

FLUIMAC S.r.l. - Via Breascia ,1 - 21049 - Tradate - VA - ITALY
info@fluimac.com - www.fluimac.com
tel. +39 0331 866688 - Fax +39 0331 864870
P.I./VAT 03259160129

ISO 9001:2008